PNOZ m EF 16DI

PILZ
THE SPIRIT OF SAFETY

Configurable, safe small controllers PNOZmulti 2

Operating Manual-1002703-EN-05

1 Introduction

1.1 Validity of documentation

This documentation is valid for the product PNOZ m EF 16DI. It is valid until new documentation is published.

This operating manual explains the function and operation, describes the installation and provides guidelines on how to connect the product.

1.2 Using the documentation

This document is intended for instruction. Only install and commission the product if you have read and understood this document. The document should be retained for future reference.

1.3 Definition of symbols

Information that is particularly important is identified as follows:

DANGER!

This warning must be heeded! It warns of a hazardous situation that poses an immediate threat of serious injury and death and indicates preventive measures that can be taken.

WARNING!

This warning must be heeded! It warns of a hazardous situation that could lead to serious injury and death and indicates preventive measures that can be taken.

CAUTION!

This refers to a hazard that can lead to a less serious or minor injury plus material damage, and also provides information on preventive measures that can be taken.

NOTICE

This describes a situation in which the product or devices could be damaged and also provides information on preventive measures that can be taken. It also highlights areas within the text that are of particular importance.

INFORMATION

This gives advice on applications and provides information on special features.

2 Overview

2.1 Scope of supply

- Expansion module PNOZ m EF 16DI
- Jumper

2.2 Unit features

Application of the product PNOZ m EF 16DI:

Expansion module for connection to a base unit from the system.

The product has the following features:

- Can be configured in the PNOZmulti Configurator
- 16 inputs for connecting, for example:
  - E-STOP pushbutton
  - Two-hand button
  - Safety gate limit switch
  - Start button
  - Light beam devices
  - Scanner
  - Enabling switch
  - PSEN
  - Operating mode selector switch
- LED for:
  - Error messages
  - Diagnostics
- Test pulse outputs used to monitor shorts across the inputs
- Plug-in connection terminals:
  Either spring-loaded terminal or screw terminal available as an accessory (see order reference)
- Please refer to the document "PNOZmulti System Expansion" for the PNOZmulti base units that can be connected.

2.3 Front view

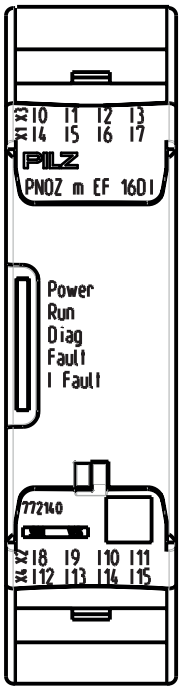

Legend:

- Inputs I0 – I15
- LEDs:
  - POWER
  - Run
  - Diag
  - Fault
  - I Fault

To determine the version of the device, please note:

The firmware version number is on the labelling clip. This is also the version number that must be selected in the PNOZmulti Configurator under ***Version*** during the hardware configuration.

3 Safety

3.1 Intended use

The expansion module may only be connected to a base unit from the configurable system (please refer to the document "PNOZmulti System Expansion" for details of the base units that can be connected).

The configurable system is used for the safety-related interruption of safety circuits and is designed for use in:

- Emergency stop equipment
- Safety circuits in accordance with VDE 0113 Part 1 and EN 60204-1
- The product PNOZ m EF 16DI meets the requirements of the standards EN 81-20, EN 81-22 and EN 81-50, harmonised under the Lifts Directive 2014/33/EU, and the requirements of the standard EN 115-1, harmonised under the Machinery Directive 2006/42/EC.
- The programmable safety system should be installed in a protected environment that meets at least the requirements of pollution degree 2.
  Example: Protected inside space or control cabinet with protection type IP54 and corresponding air conditioning.

The product PNOZ m EF 16DI can be used in furnaces in accordance with EN 298.

The following is deemed improper use in particular

- Any component, technical or electrical modification to the product,
- Use of the product outside the areas described in this manual,
- Use of the product outside the technical details (see Technical details [📖 15]).

NOTICE

EMC-compliant electrical installation

The product is designed for use in an industrial environment. The product may cause interference if installed in other environments. If installed in other environments, measures should be taken to comply with the applicable standards and directives for the respective installation site with regard to interference.

3.2 System requirements

Please refer to the "Product Modifications PNOZmulti" document in the "Version overview" section for details of which versions of the base unit and PNOZmulti Configurator can be used for this product.

3.3 Safety regulations

3.3.1 Safety assessment

Before using a device it is necessary to perform a safety assessment in accordance with the Machinery Directive.

Functional safety is guaranteed for the product as a single component. However, this does not guarantee the functional safety of the overall plant/machine. In order to achieve the required safety level for the overall plant/machine, define the safety requirements for the plant/machine and then define how these must be implemented from a technical and organisational standpoint.

3.3.2 Use of qualified personnel

The products may only be assembled, installed, programmed, commissioned, operated, maintained and decommissioned by competent persons.

A competent person is someone who, because of their training, experience and current professional activity, has the specialist knowledge required to test, assess and operate the work equipment, devices, systems, plant and machinery in accordance with the general standards and guidelines for safety technology.

It is the company's responsibility only to employ personnel who

- Are familiar with the basic regulations concerning health and safety / accident prevention,
- Have read and understood the information provided in this description under "Safety",
- And have a good knowledge of the generic and specialist standards applicable to the specific application.

3.3.3 Warranty and liability

All claims to warranty and liability will be rendered invalid if

- The product was used contrary to the purpose for which it is intended,
- Damage can be attributed to not having followed the guidelines in the manual,
- Operating personnel are not suitably qualified,
- Any type of modification has been made (e.g. exchanging components on the PCB boards, soldering work etc.).

3.3.4 Disposal

- In safety-related applications, please comply with the mission time T_M in the safety-related characteristic data.
- When decommissioning, please comply with local regulations regarding the disposal of electronic devices (e.g. Electrical and Electronic Equipment Act).

3.3.5 For your safety

The unit meets all the necessary conditions for safe operation. However, you should always ensure that the following safety requirements are met:

- This operating manual only describes the basic functions of the unit. The expanded functions are described in the PNOZmulti Configurator's online help. Only use these functions once you have read and understood the documentations.
- Do not open the housing or make any unauthorised modifications.
- Please make sure you shut down the supply voltage when performing maintenance work (e.g. exchanging contactors).

4 Function description

4.1 Integrated protection mechanisms

The relay meets the following safety requirements:

- The circuit is redundant with built-in self-monitoring.
- The safety device remains effective in the case of a component failure.

4.2 Functions

The expansion module provides additional inputs.

The function of the inputs on the safety system depends on the safety circuit created using the PNOZmulti Configurator. A removable data medium is used to download the safety circuit to the base unit. The base unit has 2 microcontrollers that monitor each other. They evaluate the input circuits on the base unit and expansion modules and switch the outputs on the base unit and expansion modules accordingly.

The online help on the PNOZmulti Configurator contains descriptions of the operating modes and all the functions of the PNOZmulti safety system, plus connection examples.

4.3 System reaction time

Calculation of the maximum reaction time between an input switching off and a linked output in the system switching off is described in the document "PNOZmulti System Expansion".

4.4 Block diagram

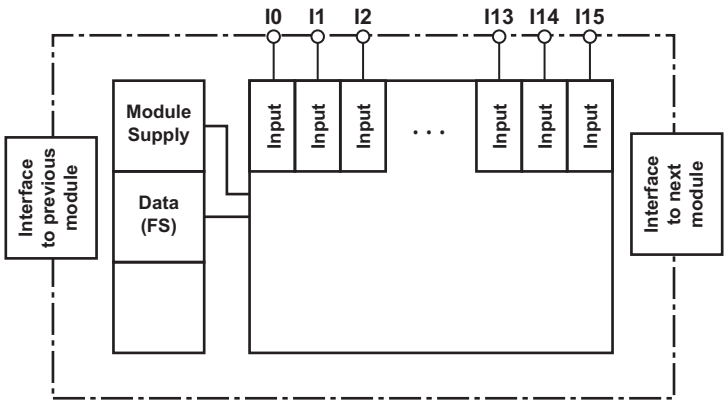

5 Installation

5.1 General installation guidelines

- The unit should be installed in a control cabinet with a protection type of at least IP54.
- Fit the safety system to a horizontal mounting rail. The venting slots must face upward and downward. Other mounting positions could damage the safety system.
- Use the locking elements on the rear of the unit to attach it to a mounting rail.
- In environments exposed to heavy vibration, the unit should be secured using a fixing element (e.g. retaining bracket or end angle).
- Open the locking slide before lifting the unit from the mounting rail.
- To comply with EMC requirements, the mounting rail must have a low impedance connection to the control cabinet housing.
- The ambient temperature of the PNOZmulti units in the control cabinet must not exceed the figure stated in the technical details. Air conditioning may otherwise be required.

NOTICE

Damage due to electrostatic discharge!

Electrostatic discharge can damage components. Ensure against discharge before touching the product, e.g. by touching an earthed, conductive surface or by wearing an earthed armband.

5.2 Dimensions in mm

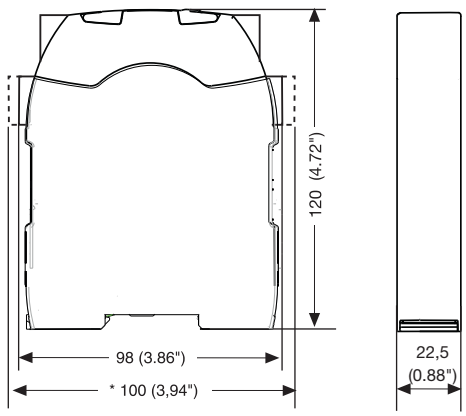

5.3 Connecting the base unit and expansion modules

Connect the base unit and the expansion modules as described in the operating manuals for the base modules.

- The terminator must be fitted to the last expansion module
- Install the expansion module in the position configured in the PNOZmulti Configurator.

The position of the expansion modules is defined in the PNOZmulti Configurator. The expansion modules are connected to the left or right of the base unit, depending on the type.

Please refer to the document "PNOZmulti System Expansion" for details of the number of modules that can be connected to the base unit and the module types.

6 Commissioning

6.1 General wiring guidelines

The wiring is defined in the circuit diagram of the PNOZmulti Configurator.

Please note:

- Information given in the Technical details [📖 15] must be followed.
- The position of the expansion module is specified in the Hardware configuration of the PNOZmulti Configurator.
- Use copper wiring with a temperature stability of 75 °C.

6.2 Connection

Input circuit	Single-channel	Dual-channel
Example: E-Stop without detection of shorts across contacts	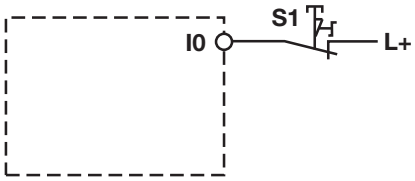	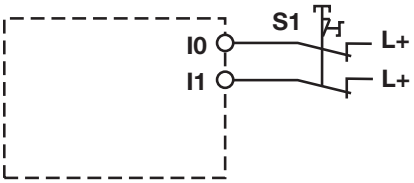
Example: E-Stop with detection of shorts across contacts	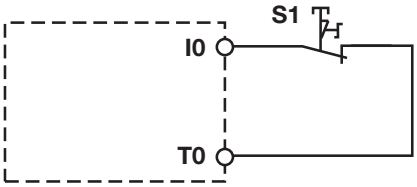	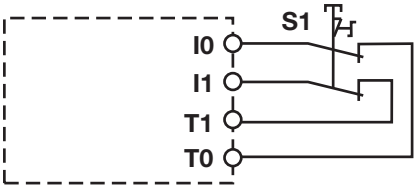

6.3 Download modified project to the PNOZmulti system

As soon as an additional expansion module has been connected to the system, the project must be amended in the PNOZmulti Configurator and downloaded back into the base unit. Proceed as described in the operating manual for the base unit.

NOTICE

For the commissioning and after every user program change, you must check whether the safety devices are functioning correctly.

7 Operation

When the supply voltage is switched on, the PNOZmmulti copies the configuration from the chip card.

The PNOZmmulti control system is ready for operation when the "POWER" and "RUN" LEDs on the base unit are lit continuously.

7.1 Messages

Legend

☼ LED on

◐ LED flashes

● LED off

Error					
POWER	Run	Diag	Fault	IFault	
					No supply voltage
☼	☼				Expansion module PNOZ m EF 16DI is running without error
☼					Expansion module PNOZ m EF 16DI is in a STOP condition
☼			◐		Internal error on the expansion module PNOZ m EF 16DI or on the overall system. Expansion module is in a safe condition.
☼			☼		External error on the expansion module PNOZ m EF 16DI or on the overall system. Expansion module is in a safe condition.
☼				◐	Internal error on the inputs of the expansion module PNOZ m EF 16DI. Expansion module is in a safe condition, e.g. pulse error.
☼				☼	External error on the inputs of the expansion module PNOZ m EF 16DI. Expansion module is in a safe condition.

8 Technical details

General	
Certifications	**CE, EAC (Eurasian), KOSHA, TÜV, cULus Listed**
Application range	**Failsafe**
Module's device code	**00E2h**
Electrical data	
Supply voltage	
for	**Module supply**
internal	**Via base unit**
Voltage	**24 V**
Kind	**DC**
Current consumption	**46 mA**
Power consumption	**1,1 W**
Max. power dissipation of module	**3 W**
Status indicator	**LED**
Inputs	
Number	**16**
Input voltage in accordance with EN 61131-2 Type 1	**24 V DC**
Input current at rated voltage	**5 mA**
Input current range	**2,5 - 5,3 mA**
Pulse suppression	**0,5 ms**
Maximum input delay	**8 ms**
Potential isolation	**No**
Environmental data	
Ambient temperature	
In accordance with the standard	**EN 60068-2-14**
Temperature range	**0 - 60 °C**
Forced convection in control cabinet off	**55 °C**
Storage temperature	
In accordance with the standard	**EN 60068-2-1/-2**
Temperature range	**-25 - 70 °C**
Climatic suitability	
In accordance with the standard	**EN 60068-2-30, EN 60068-2-78**
Condensation during operation	**Not permitted**
Max. operating height above sea level	**2000 m**
EMC	**EN 61131-2**
Vibration	
In accordance with the standard	**EN 60068-2-6**
Frequency	**5 - 150 Hz**
Acceleration	**1g**
Shock stress	
In accordance with the standard	**EN 60068-2-27**
Acceleration	**15g**
Duration	**11 ms**

Environmental data	
Airgap creepage	
In accordance with the standard	**EN 61131-2**
Overvoltage category	**II**
Pollution degree	**2**
Rated insulation voltage	**30 V**
Protection type	
In accordance with the standard	**EN 60529**
Housing	**IP20**
Terminals	**IP20**
Mounting area (e.g. control cabinet)	**IP54**
Mechanical data	
Mounting position	**horizontally on mounting rail**
DIN rail	
Top hat rail	**35 x 7,5 EN 50022**
Recess width	**27 mm**
Max. cable length	
Max. cable length per input	**1 km**
Material	
Bottom	**PC**
Front	**PC**
Top	**PC**
Connection type	**Spring-loaded terminal, screw terminal**
Mounting type	**plug-in**
Conductor cross section with screw terminals	
1 core flexible	**0,25 - 2,5 mm², 24 - 12 AWG**
2 core with the same cross section, flexible without crimp connectors or with TWIN crimp connectors	**0,2 - 1,5 mm², 24 - 16 AWG**
Torque setting with screw terminals	**0,5 Nm**
Conductor cross section with spring-loaded terminals: Flexible with/without crimp connector	**0,2 - 2,5 mm², 24 - 12 AWG**
Spring-loaded terminals: Terminal points per connection	**2**
Stripping length with spring-loaded terminals	**9 mm**
Dimensions	
Height	**101,4 mm**
Width	**22,5 mm**
Depth	**120 mm**
Weight	**95 g**

Where standards are undated, the 2012-08 latest editions shall apply.

8.1 Safety characteristic data

NOTICE

You must comply with the safety characteristic data in order to achieve the required safety level for your plant/machine.

Unit	Operating mode	EN ISO 13849-1: 2015 PL	EN ISO 13849-1: 2015 Category	EN 62061 SIL CL	EN 62061 PFH_D [1/h]	EN ISO 13849-1: 2015 T_M [year]
Logic						
CPU	**2-channel**	**PL e**	**Cat. 4**	**SIL CL 3**	**2,84E-10**	**20**
Input						
SC inputs	**1-channel**	**PL d**	**Cat. 2**	**SIL CL 2**	**2,10E-09**	**20**
SC inputs	**2-channel**	**PL e**	**Cat. 4**	**SIL CL 3**	**4,27E-11**	**20**
SC inputs	**Short circuit-forming safety mats**	**PL d**	**Cat. 3**	**SIL CL 2**	**1,80E-10**	**20**
SC inputs	**1-ch., pulsed light barrier**	**PL e**	**Cat. 4**	**SIL CL 3**	**2,10E-10**	**20**

All the units used within a safety function must be considered when calculating the safety characteristic data.

INFORMATION

A safety function's SIL/PL values are **not** identical to the SIL/PL values of the units that are used and may be different. We recommend that you use the PAScal software tool to calculate the safety function's SIL/PL values.

8.2 Classification according to ZVEI, CB24I

The following tables describe the classes and specific values of the product interface and the classes of interfaces compatible with it. The classification is described in the ZVEI position paper "Classification of Binary 24 V Interfaces - Functional Safety aspects covered by dynamic testing".

Input	
Interfaces	
Drain	
Interface	**Module**
Class	**C2**
Source	
Interface	**Sensor**
Class	**C2, C3**
Drain parameters	
Test pulse duration, safety outputs	**500 µs**
Min. input resistance	**5,6 kOhm**
Max. capacitive load	**126 nF**

9 Order reference

9.1 Product

Product type	Features	Order No.
PNOZ m EF 16DI	Expansion module	772 140

9.2 Accessories

Connection terminals

Product type	Features	Order No.
Set spring terminals	1 set of spring-loaded terminals	751 004
Set screw terminals	1 set of screw terminals	750 004

Terminator, jumper

Product type	Features	Order no.
PNOZ mm0.xp connector left	Jumper yellow/black to connect the modules, 10 pieces	779 260

Support

Technical support is available from Pilz round the clock.

Americas
Brazil
+55 11 97569-2804
Canada
+1 888 315 7459
Mexico
+52 55 5572 1300
USA (toll-free)
+1 877-PILZUSA (745-9872)

Asia
China
+86 21 60880878-216
Japan
+81 45 471-2281
South Korea
+82 31 778 3300

Australia
+61 3 95600621

Europe
Austria
+43 1 7986263-0
Belgium, Luxembourg
+32 9 3217570
France
+33 3 88104003
Germany
+49 711 3409-444
Ireland
+353 21 4804983
Italy, Malta
+39 0362 1826711

Scandinavia
+45 74436332
Spain
+34 938497433
Switzerland
+41 62 88979-32
The Netherlands
+31 347 320477
Turkey
+90 216 5775552
United Kingdom
+44 1536 462203

You can reach our international hotline on:
+49 711 3409-444
support@pilz.com

Pilz develops environmentally-friendly products using ecological materials and energy-saving technologies. Offices and production facilities are ecologically designed, environmentally-aware and energy-saving. So Pilz offers sustainability, plus the security of using energy-efficient products and environmentally-friendly solutions.

Energy saving by Pilz

BLUECOMPETENCE Alliance Member
Partner of the Engineering Industry Sustainability Initiative

pilz
Partner of:
The Best of German Engineering

DIN EN ISO 9001
REG. NO. 2462

1002703-EN-05, 2019-08 Printed in Germany

We are represented internationally. Please refer to our homepage www.pilz.com for further details or contact our headquarters.

Headquarters: Pilz GmbH & Co. KG, Felix-Wankel-Straße 2, 73760 Ostfildern, Germany
Telephone: +49 711 3409-0, Telefax: +49 711 3409-133, E-Mail: info@pilz.com, Internet: www.pilz.com

PILZ
THE SPIRIT OF SAFETY